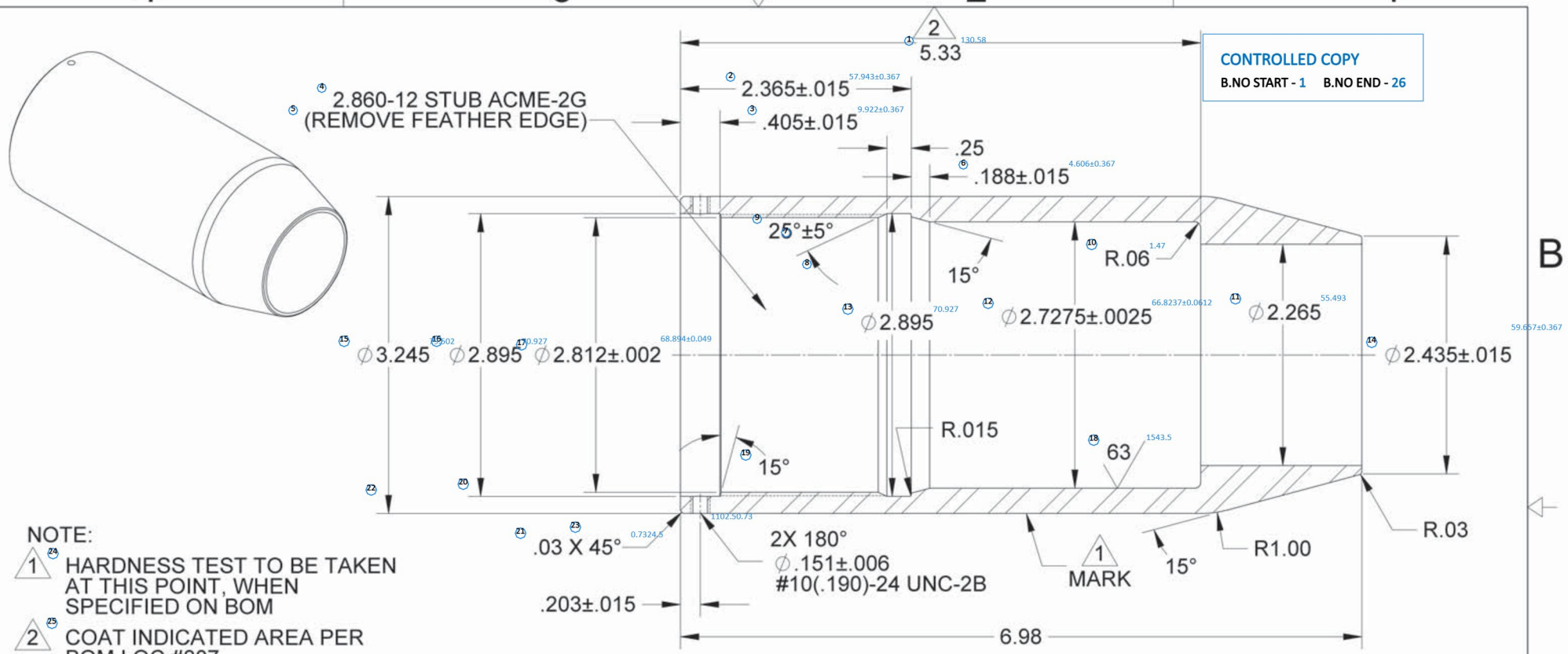

NOTE:

1. HARDNESS TEST TO BE TAKEN AT THIS POINT, WHEN SPECIFIED ON BOM
2. COAT INDICATED AREA PER BOM LOC #807

UNLESS OTHERWISE SPECIFIED, CIRCULAR RUN-OUT ON ALL SURFACES OF REVOLUTION SHOWN ON COINCIDENT AXES (SAME CENTERLINE) MUST NOT EXCEED .005 IN. FULL INDICATOR MOVEMENT (FIM).

UNLESS OTHERWISE SPECIFIED

TOLERANCES

FABRICATION
- .X = ± .25
- .XX = ± .125
- .XXX = ± .060
- ANGLES ± 3°

MACHINE
- .X = ± .030
- .XX = ± .015
- .XXX = ± .005
- .XXXX = ± .0010
- ANGLES ± 1/2°

1. DO NOT SCALE DRAWING
2. DIMS. ARE IN INCHES
3. INTERPRET DIM TOL. PER ASME Y14.5M-1994
4. REMOVE ALL BURRS AND SHARP CORNERS
5. INSIDE CORNERS R. .032, OUTSIDE CORNERS R. .020 OR CHAM. .020 X 45°
6. MACHINE FINISH

125

Form Revision H